Aldey Brutus

Electrical Engineering at Stony Brook University

Aldeybrutuseducation@duck.com

www.linkedin.com/in/AldeyBrutus

(347) 556-1414

USB TYPE C COMPATIBLE WIRELESS CHARGING MODULE

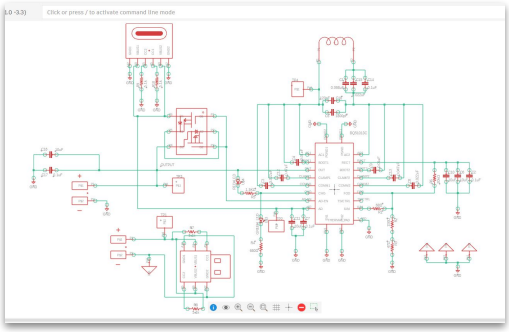

Schematic — Qi Receiver Circuit

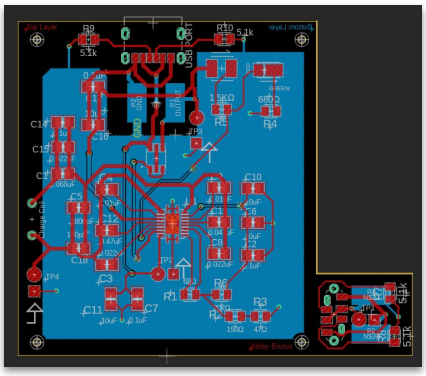

PCB Layout — Fusion 360

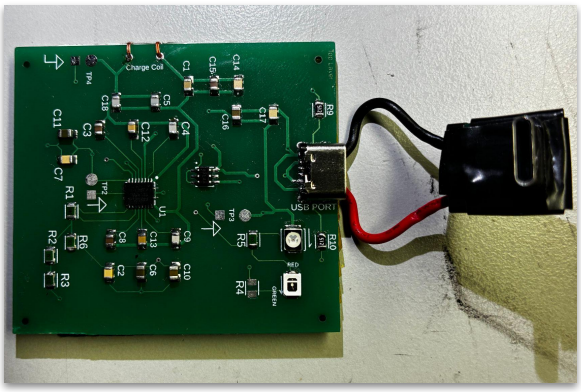

Fabricated PCB — Top View

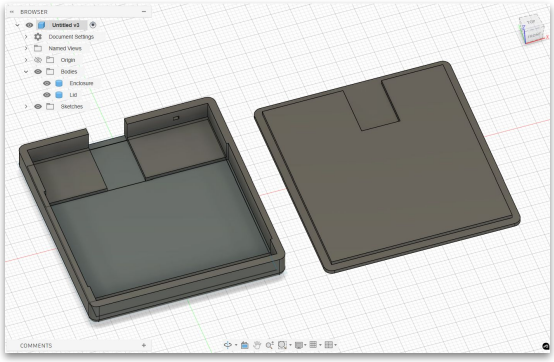

3D Printed Enclosure
Fusion 360 Render

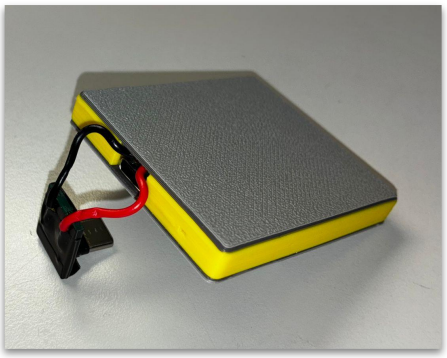

3D Printed Enclosure
Final Assembly

Module Attached to Device

What?

A compact PCB module that enables any USB Type-C powered device to receive wireless charging via a standard Qi transmitter. Designed to be portable and transferable between devices, targeting 5W of output power.

How?

The circuit was designed around a WPC Qi-compliant receiver IC, with the schematic and PCB layout completed in **Fusion 360**. Gerber files were submitted to JLCPCB for fabrication, and components were hand-soldered using a **microsoldering** station. The enclosure was modeled in Fusion 360 and 3D printed. An **oscilloscope** was used to probe test points and validate power transmission.

Results?

The wired USB-C output successfully delivered a continuous 5W at 5V. Wireless charging was not achieved in this revision due to noise on the receiver coil input from long PCB traces. A redesign is underway, repositioning the IC closer to the coil and widening power traces for sufficient current flow.

LITHIUM BATTERY PACK

18650 Lithium Cell Clean Up

Lithium Cell Sorting

Cell Capacity Testing and Charging

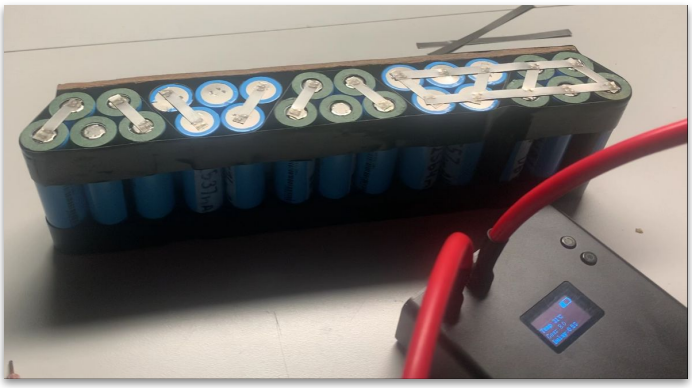

Spot Welded Nickel Strip Connections

Completed Pack — Top View

Completed Pack — Side View

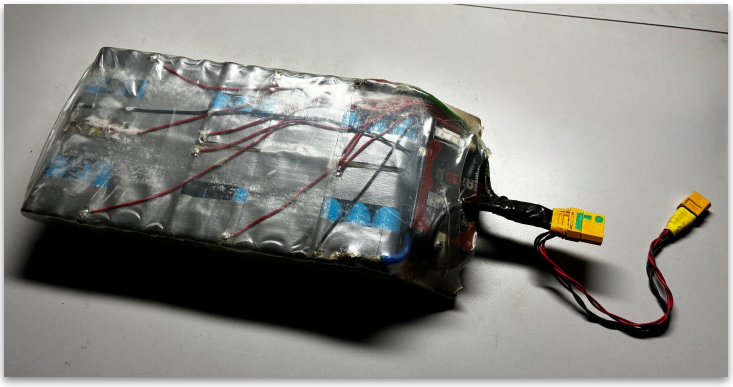

Final Assembly with XT90 Connectors

What?

A self-manufactured 10S5P lithium-ion battery pack built from 18650 cells. Designed to be a high-capacity power source for future engineering projects, with a goal of significantly undercutting the cost of equivalent commercial packs.

How?

Seventy-five 18650 cells were individually tested with a **capacity tester**, marked, and sorted into optimal groupings. Cells were assembled into a 10S5P configuration using a **spot welder** and nickel strip. A 30A BMS was integrated for safe charging and discharging, XT90 connectors were soldered to the output cables, and the pack was encased in **heat shrink** for short protection.

Results?

The completed pack delivers 40V nominal at 12.5Ah — roughly 500Wh of total capacity. Output voltage was verified with a **multimeter**. Total build cost was $65, compared to ~$140 for equivalent commercial packs, a savings of over 50%.

REMOTE OPERATED ELECTRIC LONGBOARD

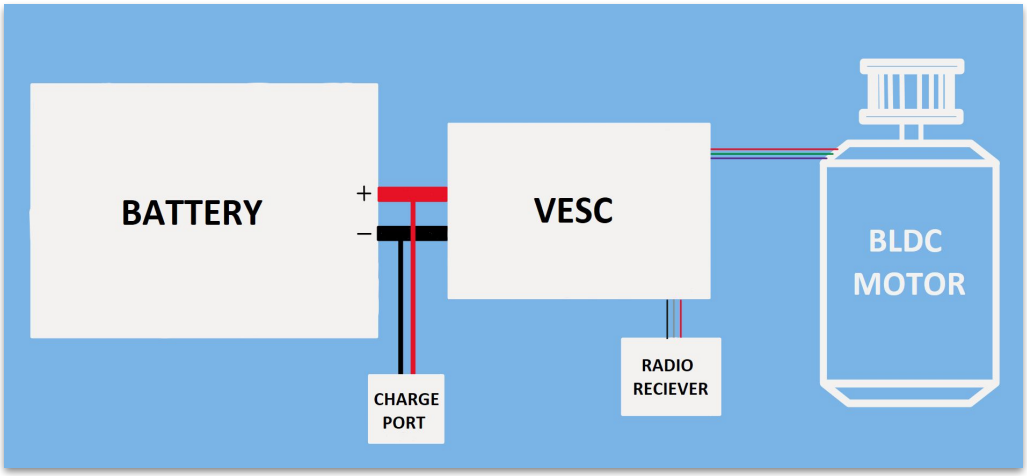

System Schematic — Battery, VESC, Motor

Motor Mount Fabrication

Electronics Housing Fabrication

Completed Board — Underside

Completed Board — Full View

Track Testing - Top Speed Verification

What?

A standard longboard converted into a remote-controlled electric vehicle, capable of carrying a 150lb rider at a top speed of 20mph. Responsibilities included electrical schematic design, motor controller programming, and fabrication of the motor mount and electronics housing.

How?

A 170KV C6374 brushless DC motor drives the rear wheel via a 2:1 belt drive reduction, controlled by a VESC and 2.4GHz radio receiver. The motor mount was cut from 1/4" steel plate using an **angle grinder**, and the electronics housing was **hand-formed** from sheet metal and secured with rivets. A 30A anti-spark switch was included for safe power switching, and the custom 10S5P battery pack was used as the power source.

Results?

Achieved a verified top speed of 20mph via track time trials, with 0-to-top-speed in 10 seconds and full braking in 8 seconds. The motor mount has held up through 50+ rides with no visible deformation. Total build cost was $250. Future plans include weight reduction, LED lighting, and an automatic rider-dismount braking system.